ShengAo Industrial Blades
Drawing - Authorized production

Contact Our Engineer:Jack Zhou
Tel: +86 13696731068
WhatsApp: +86 15212349604
Email: jack@shenaozg.com
Website: https://bladesg.com/
Services: Sampling supported
MOQ:1 piece accepted
Ink scraper blades are in stock; Other products require customization.

目录

Chipper Crusher Blade 1
Rotor Blades 2
Crusher Blade or Plastic Granulator Blades 3
Serrated Cutting Blades 5
Cutter Blade 6
Alloy-Tipped Cutting Blades 8
Corrugated Cardboard Paper Cutting Guillotine Blades 9
Serrated Crusher Blades 12
Planer Long Blade Tungsten Carbide Machine Knives 13
Custom special-shaped blades 14
Tape Making Machine,Band Production Machine Cutter Blade / Cutting Blade 16
Separator Roll Cutter 17
Flat Steel Top Blade 18

Chipper Crusher Blade

1.

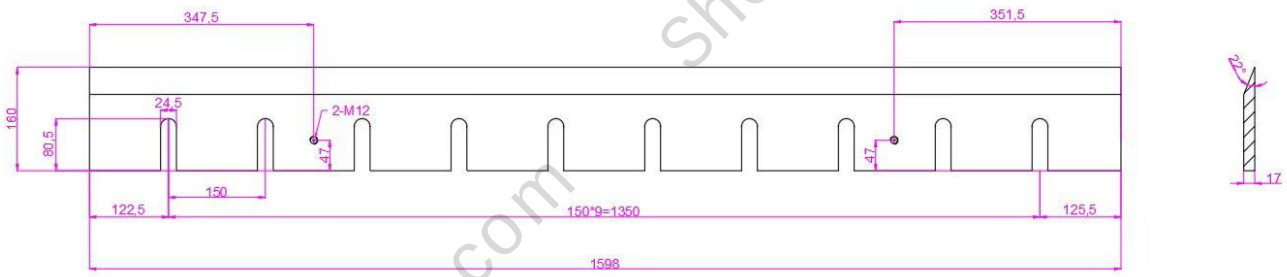

2.

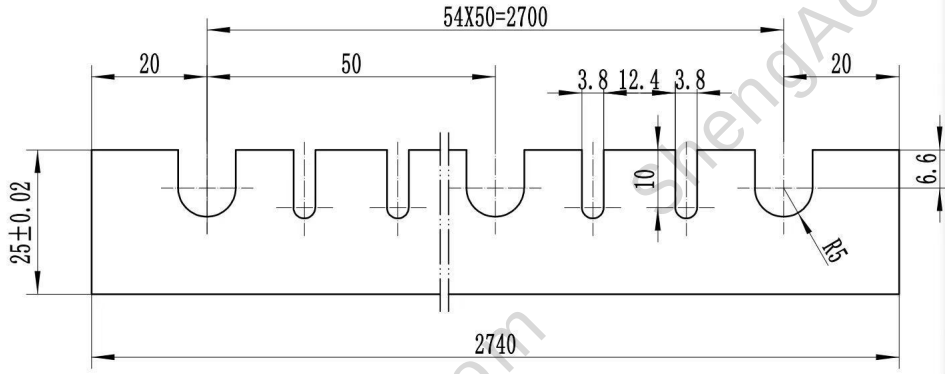

Rotor Blades

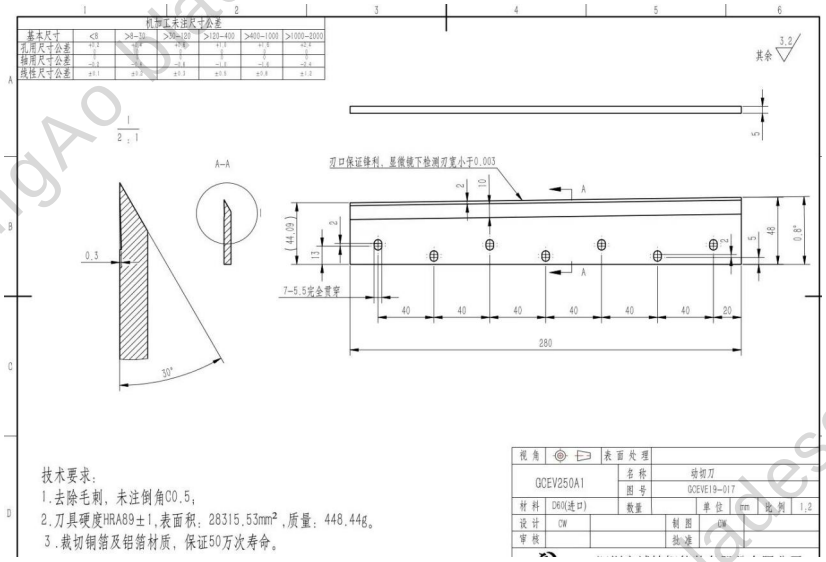

ShengAo bladesg.com

Crusher Blade or Plastic Granulator Blades

1.

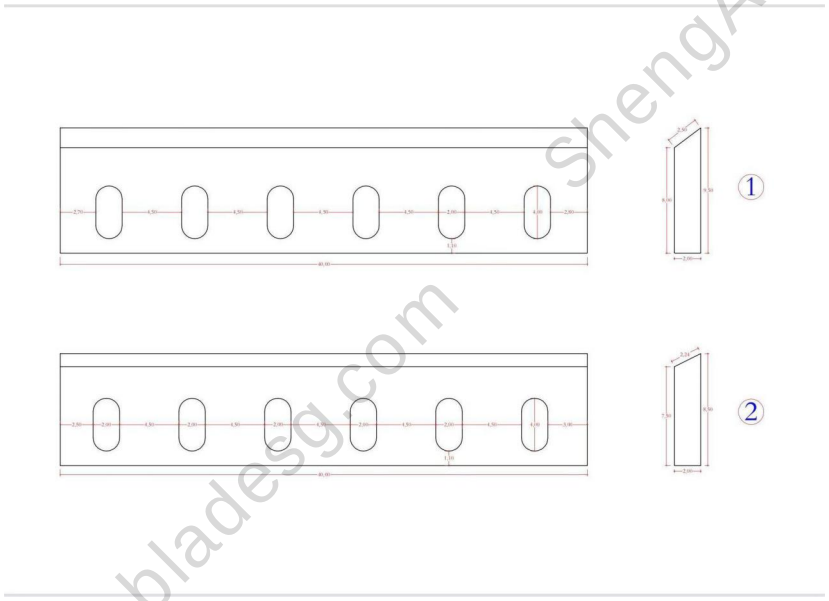

2.

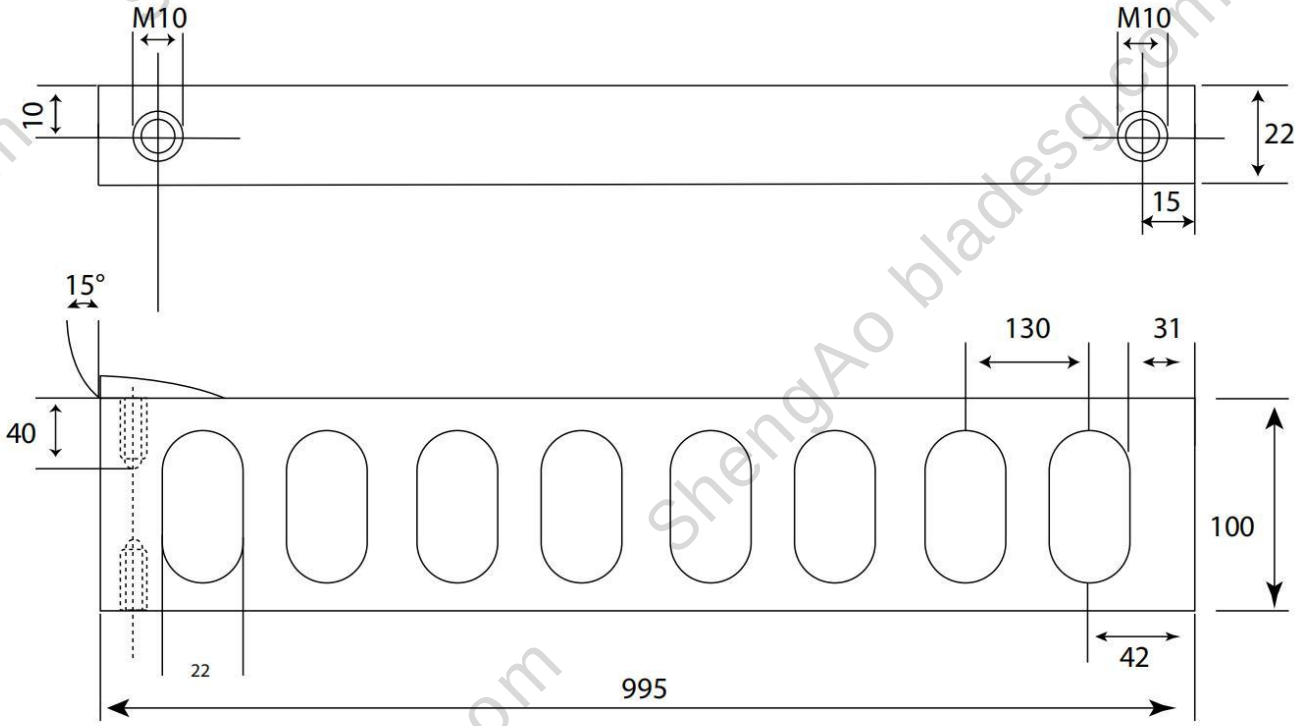

3

ShengAo bladesg.com

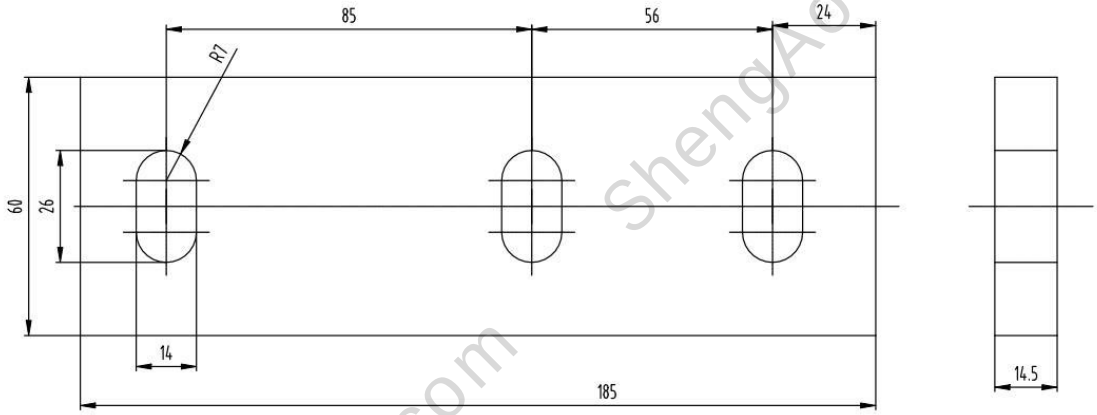

技术要求:

1.所有刃口保持尖角，不许倒角。

2.热处理：淬火52-55HRC

										项目名称	扁钢生产线
标记	处数	更改文件号	签字	日期						名称	下刀（三孔）
设计		标准化			图样标记	数量	材料	重量	比例	代号	版次
校对		审定					T10A				
审核											
工艺		日期			共	页	第	页			

4.

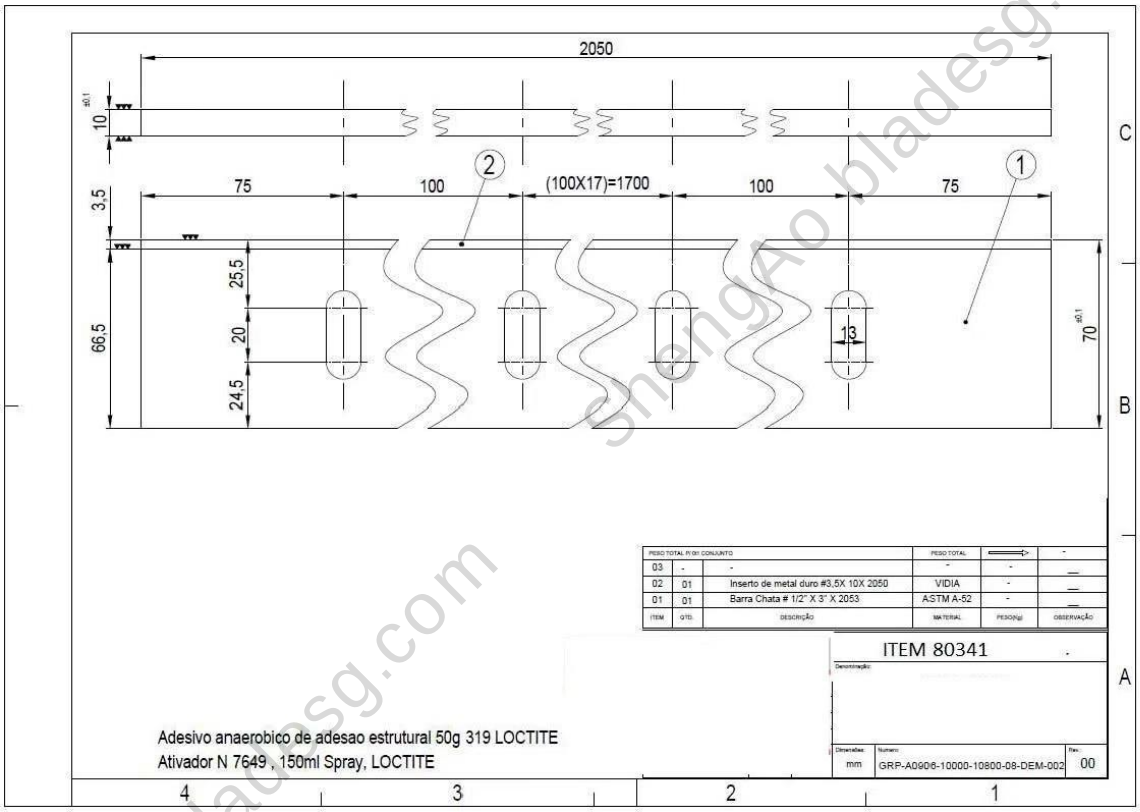

ShengAo bladesg.com

5.

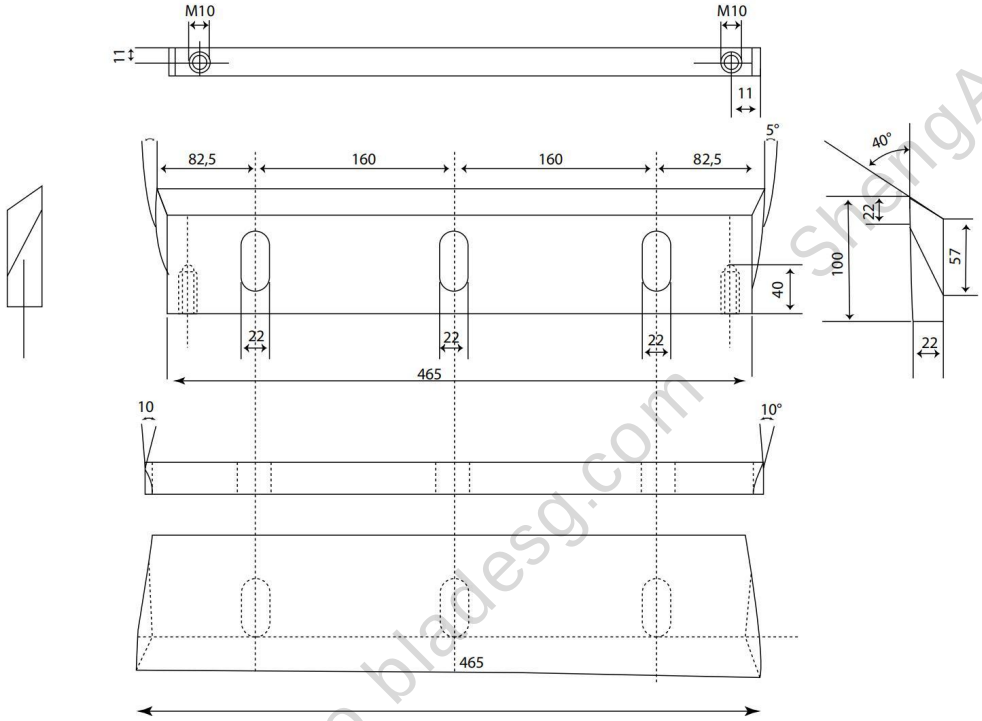

Serrated Cutting Blades

1.

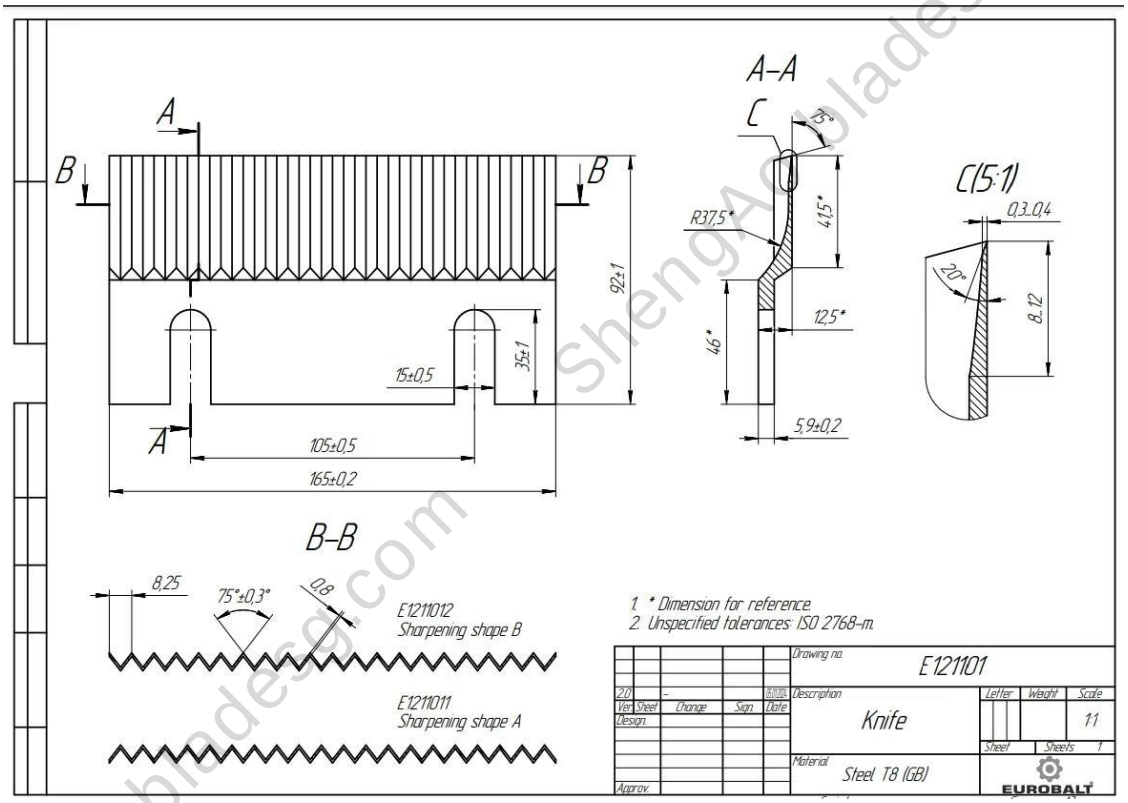

2.

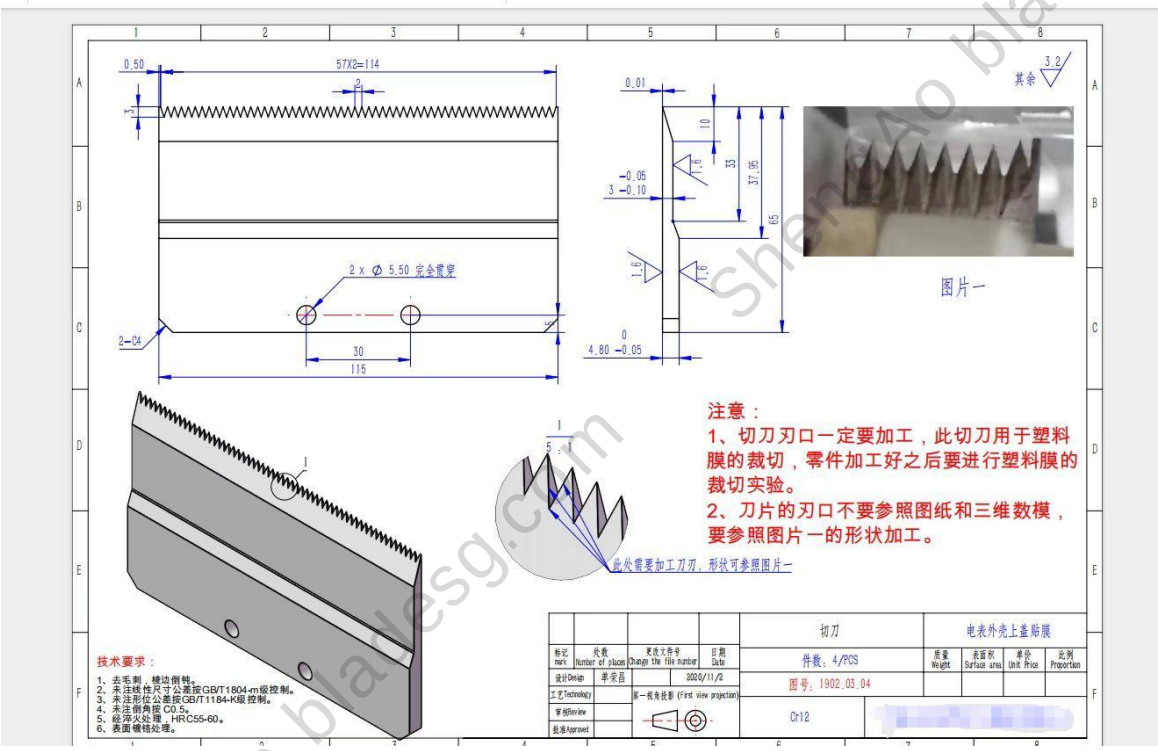

Cutter Blade

1.

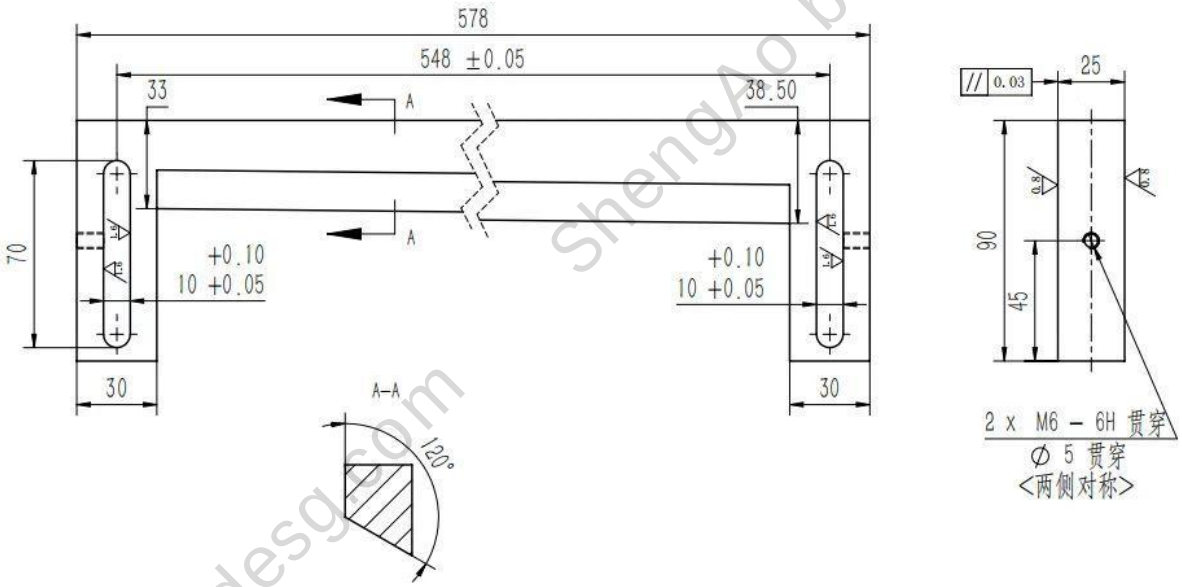

2.

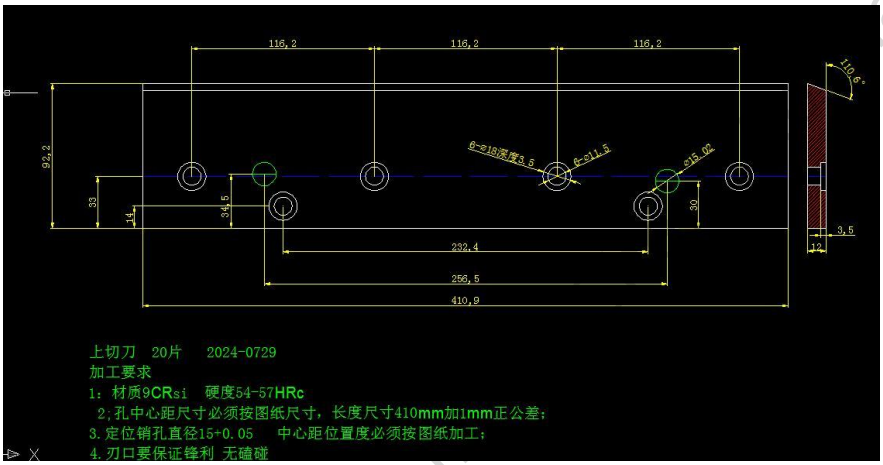

3.

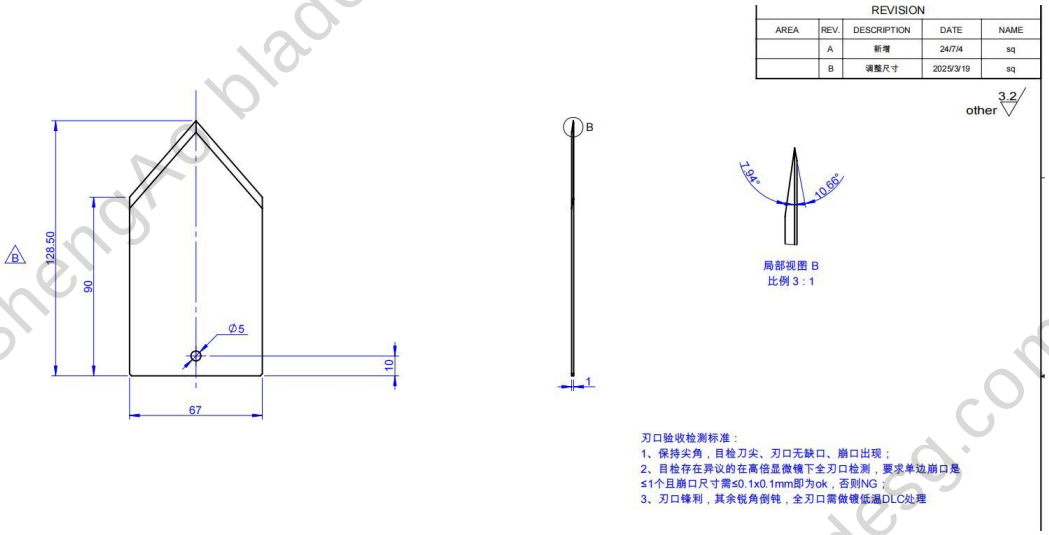

4.

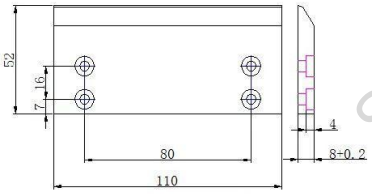

动切刀 3个 材质CR12MOV

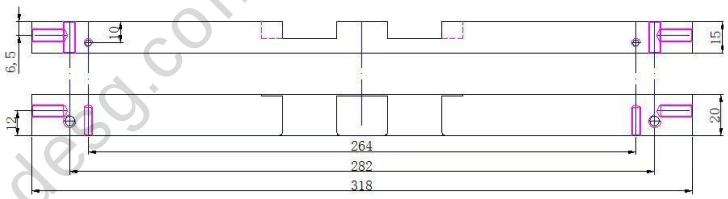

被切刀 8个 材质CR12MOV

ShengAo bladesg.com

5.

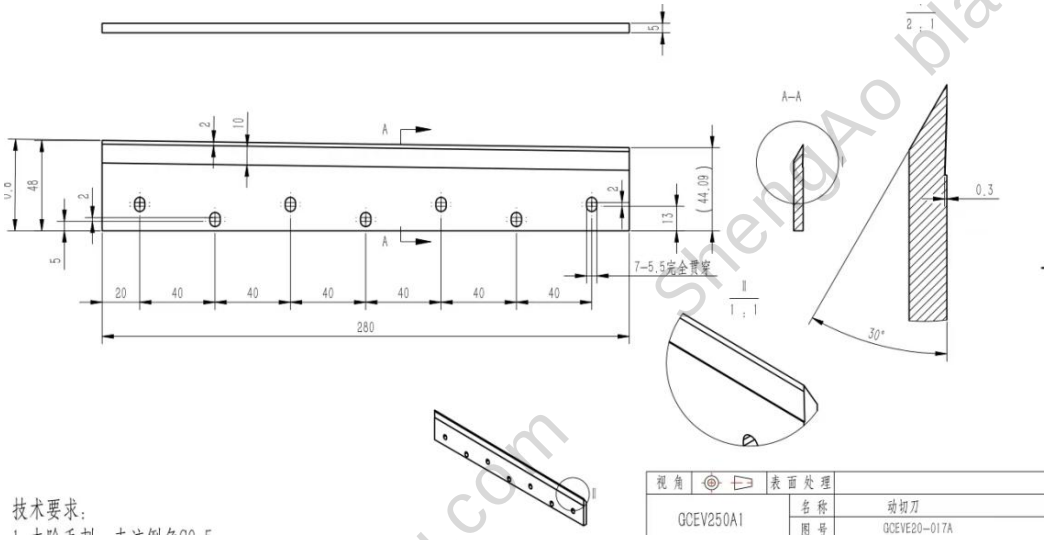

Alloy-Tipped Cutting Blades

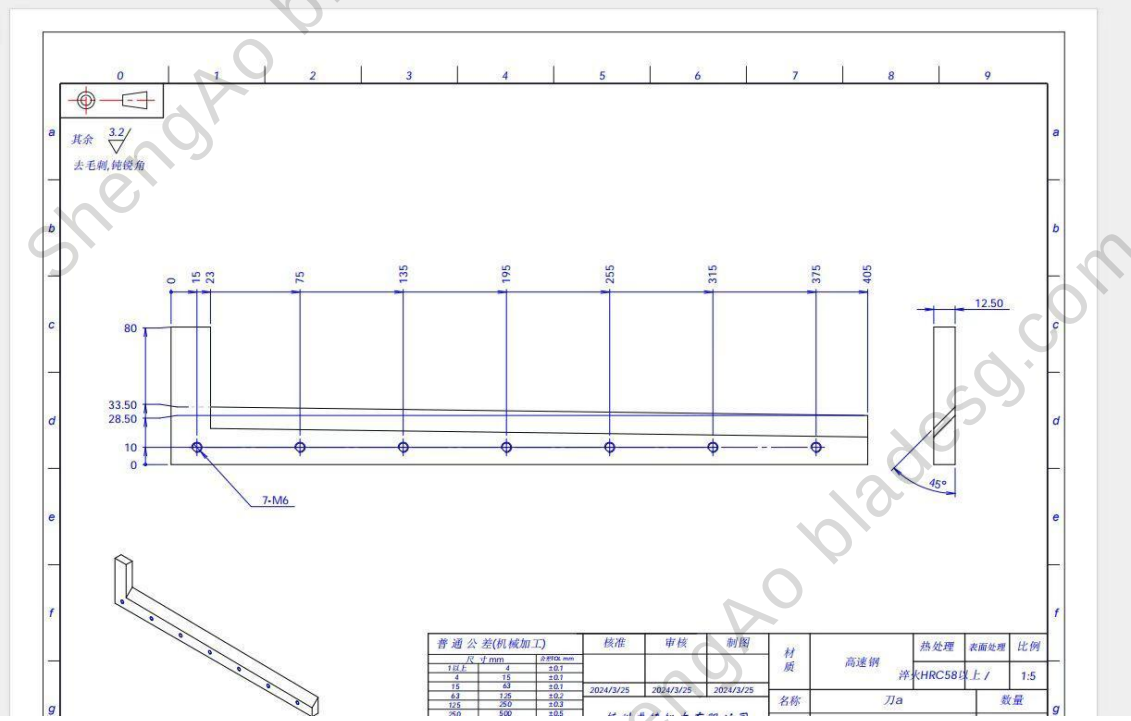

ShengAo bladesg.com

Corrugated Cardboard Paper Cutting Guillotine Blades

1.

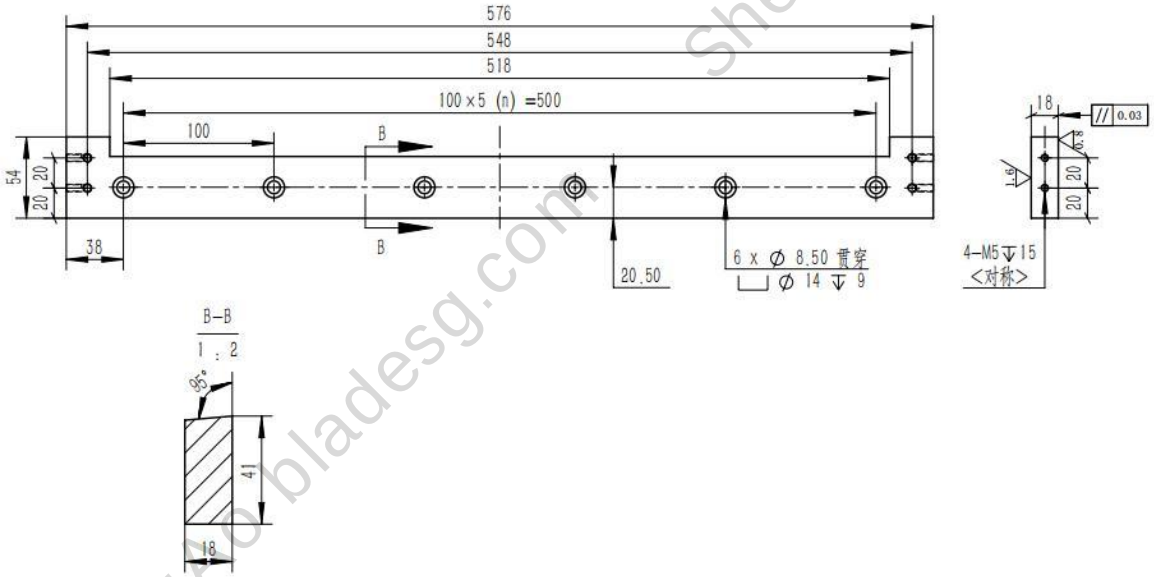

2.

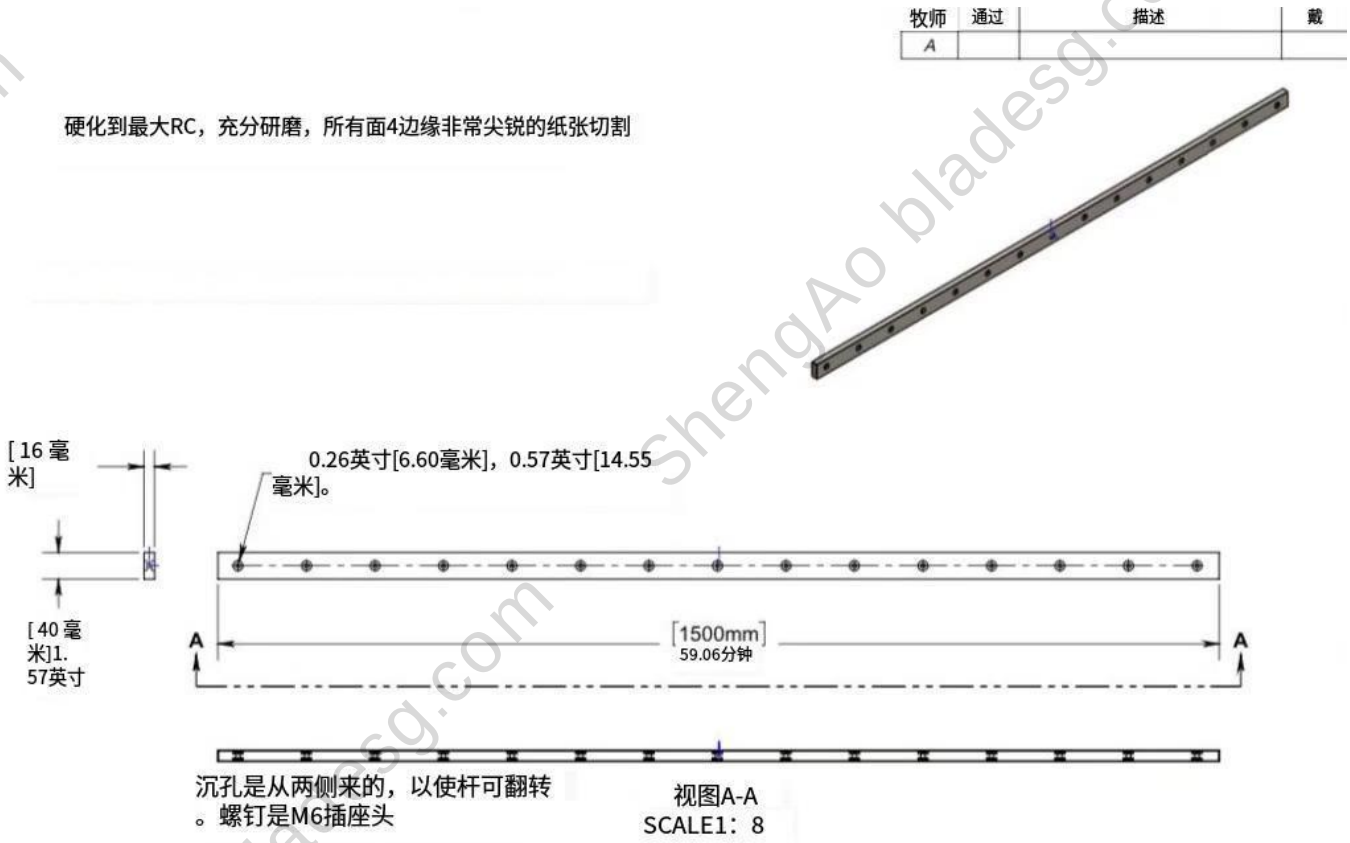

ShengAo bladesg.com

3.

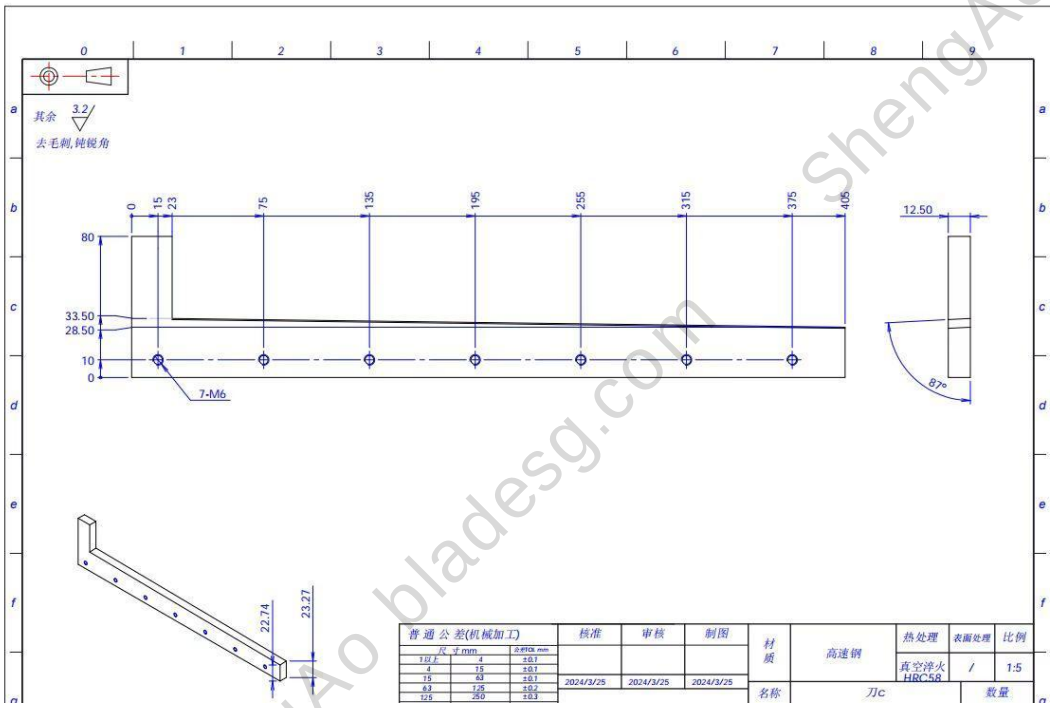

4.

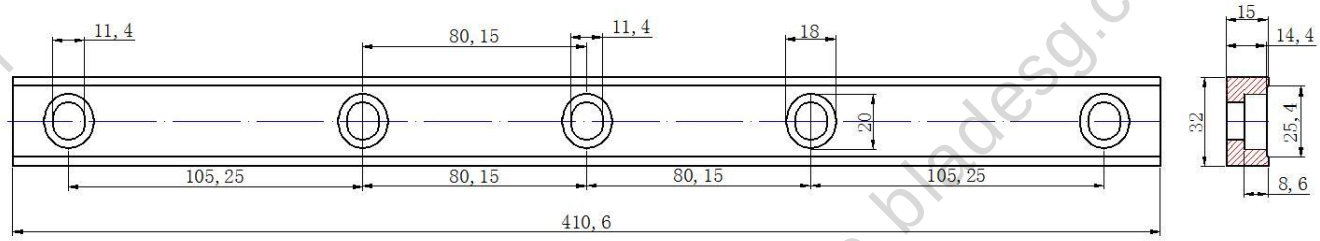

下切刀　25片　　2025-0109

加工要求

1：材质9CRsi　硬度54-57HRc

2;孔中心距尺寸必须按图纸尺寸，

3.刃口要保证锋利 无磕碰

ShengAo bladesg.com

5.

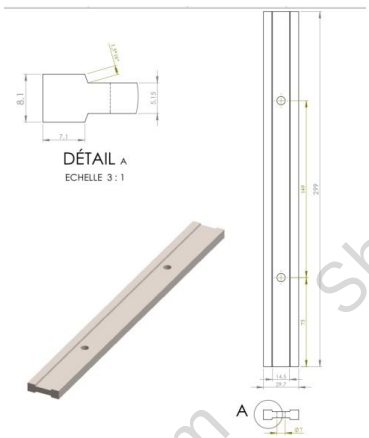

6.

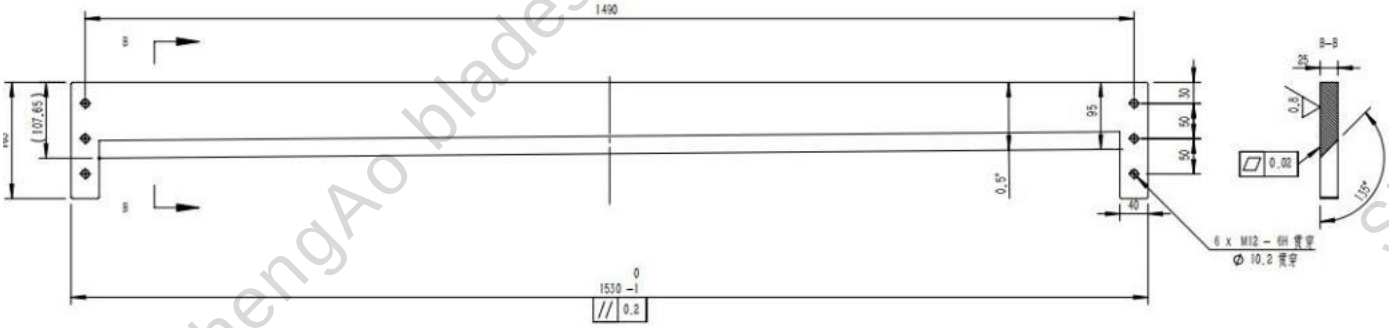

ShengAo bladesg.com

Serrated Crusher Blades

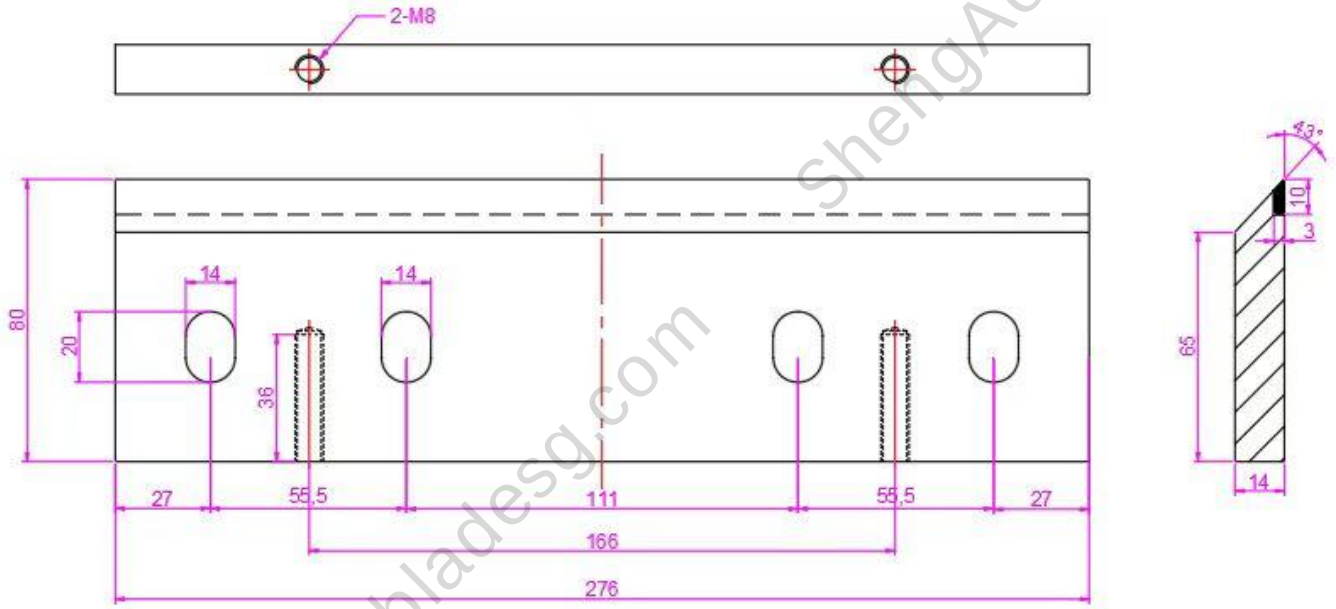

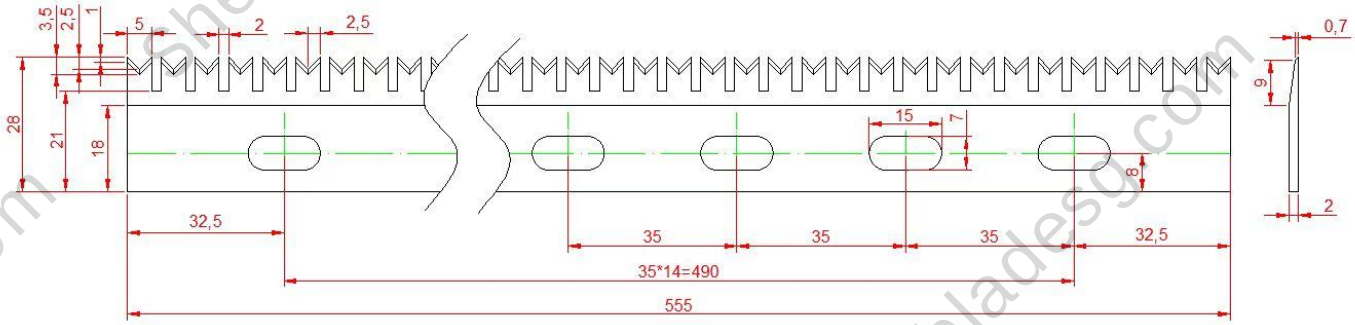

ShengAo bladesg.com

Planer Long Blade Tungsten Carbide Machine Knives

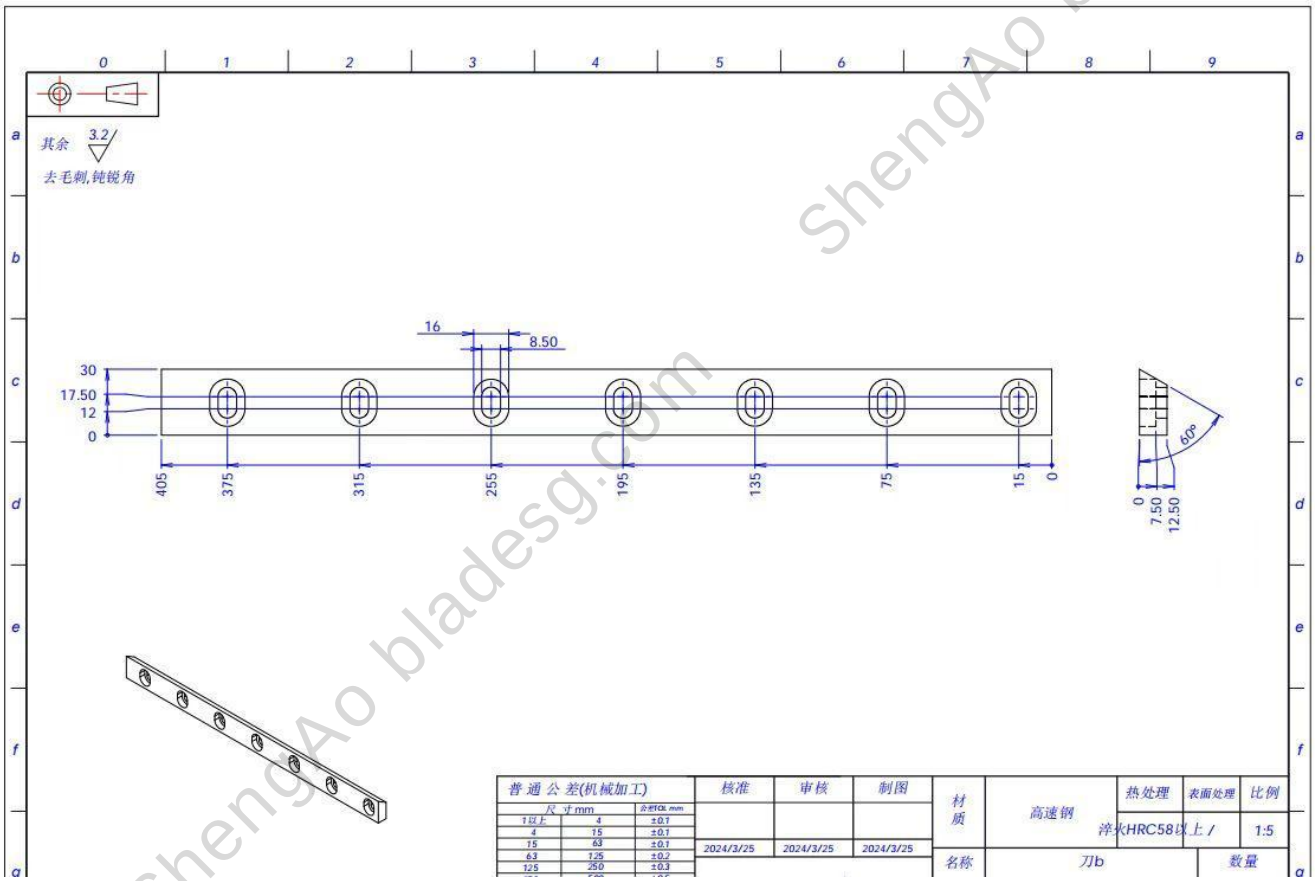

ShengAo bladesg.com

Custom special-shaped blades

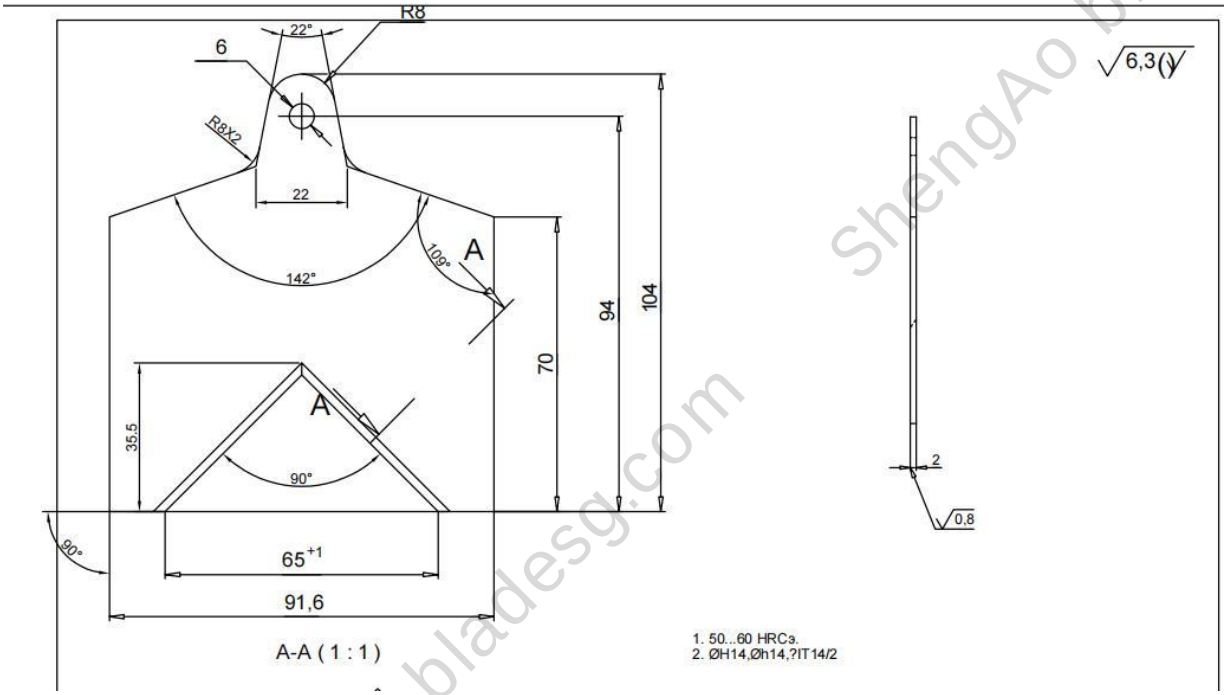

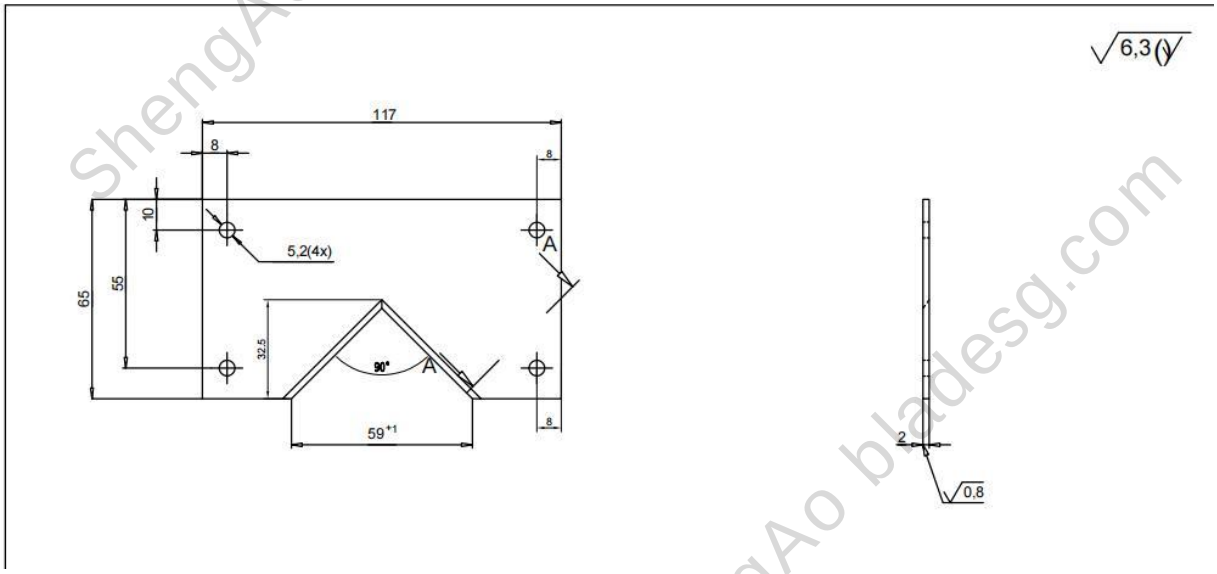

ShengAo bladesg.com

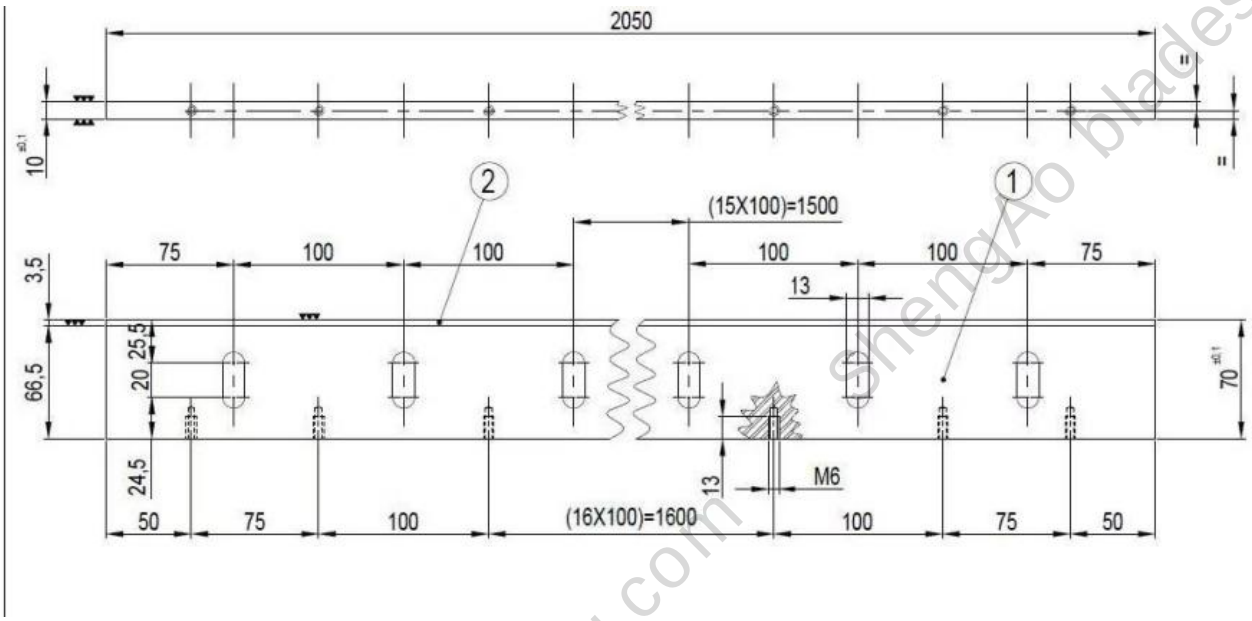

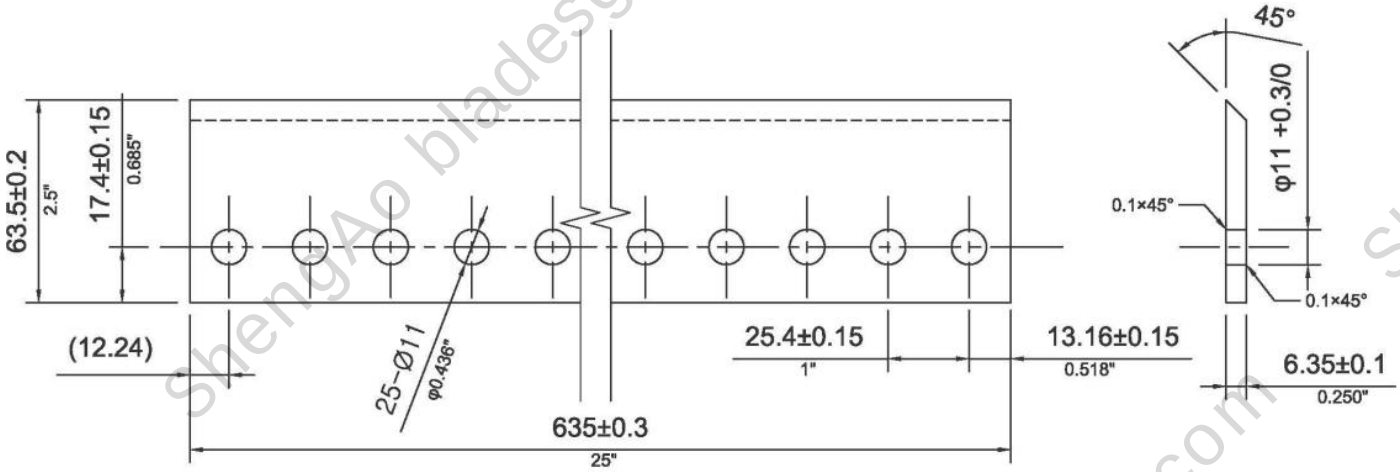

Drawing NO.SHJ19031201
Material:Cr12MoV
Hardness:58-60HRC

ShengAo bladesg.com

Tape Making Machine,Band Production Machine Cutter Blade / Cutting Blade

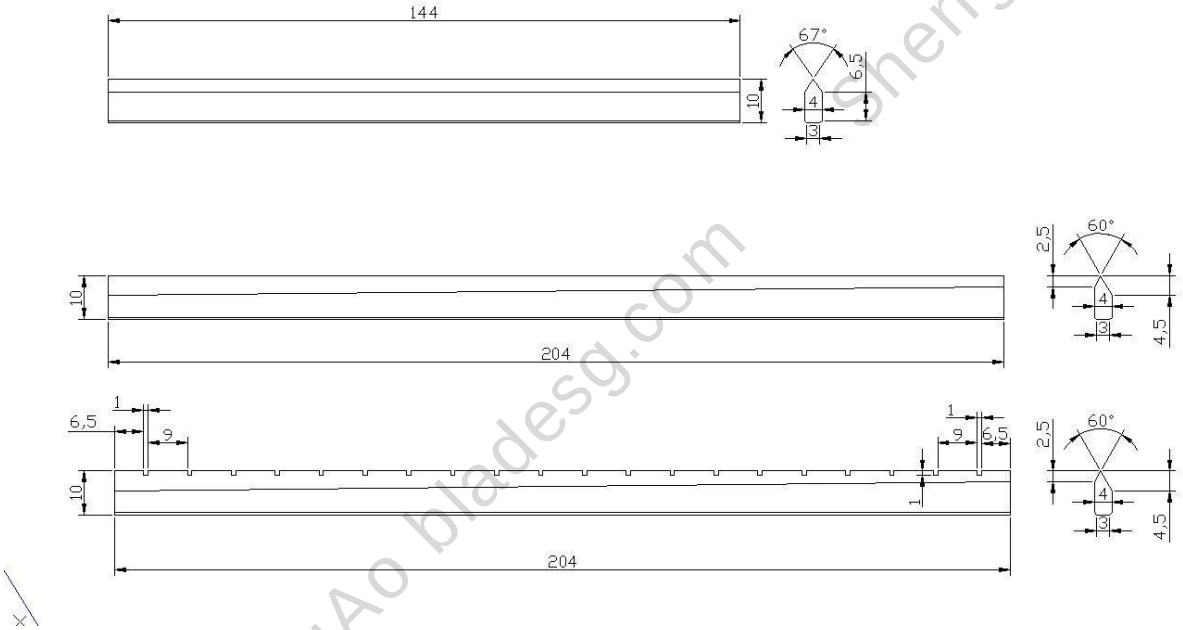

ShengAo bladesg.com

Separator Roll Cutter

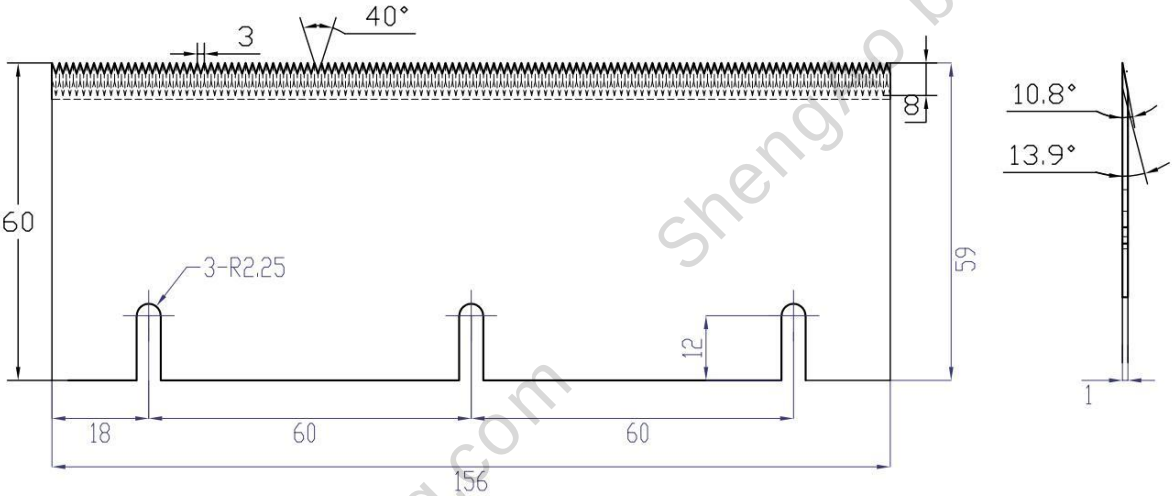

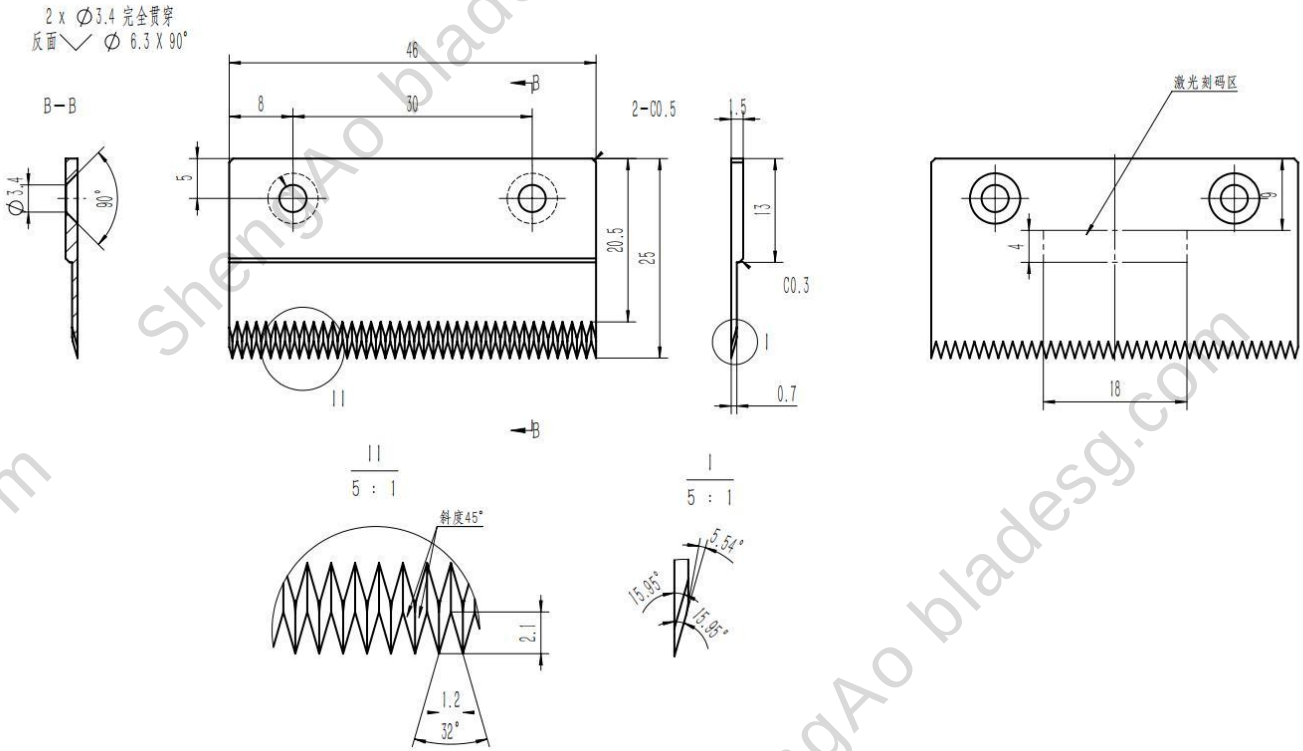

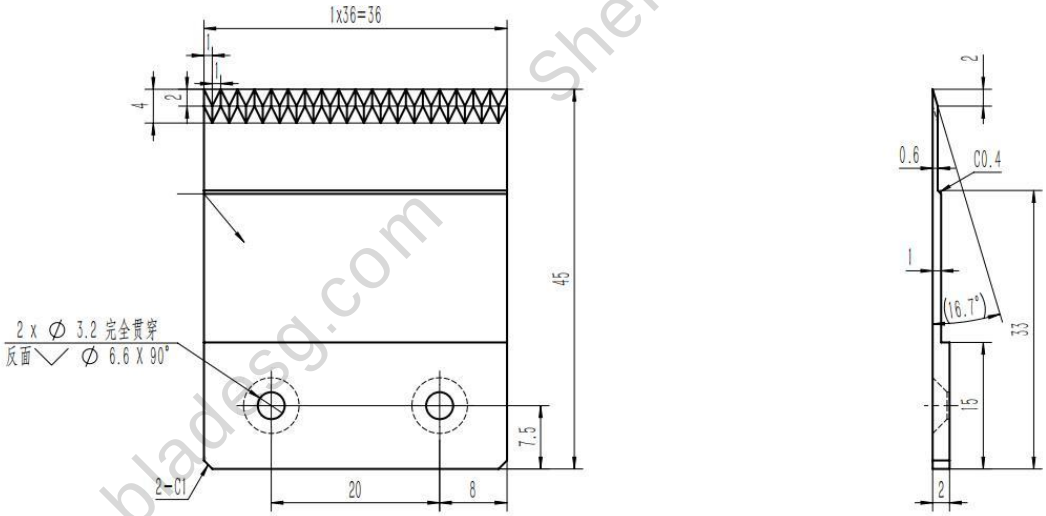

ShengAo bladesg.com

Flat Steel Top Blade

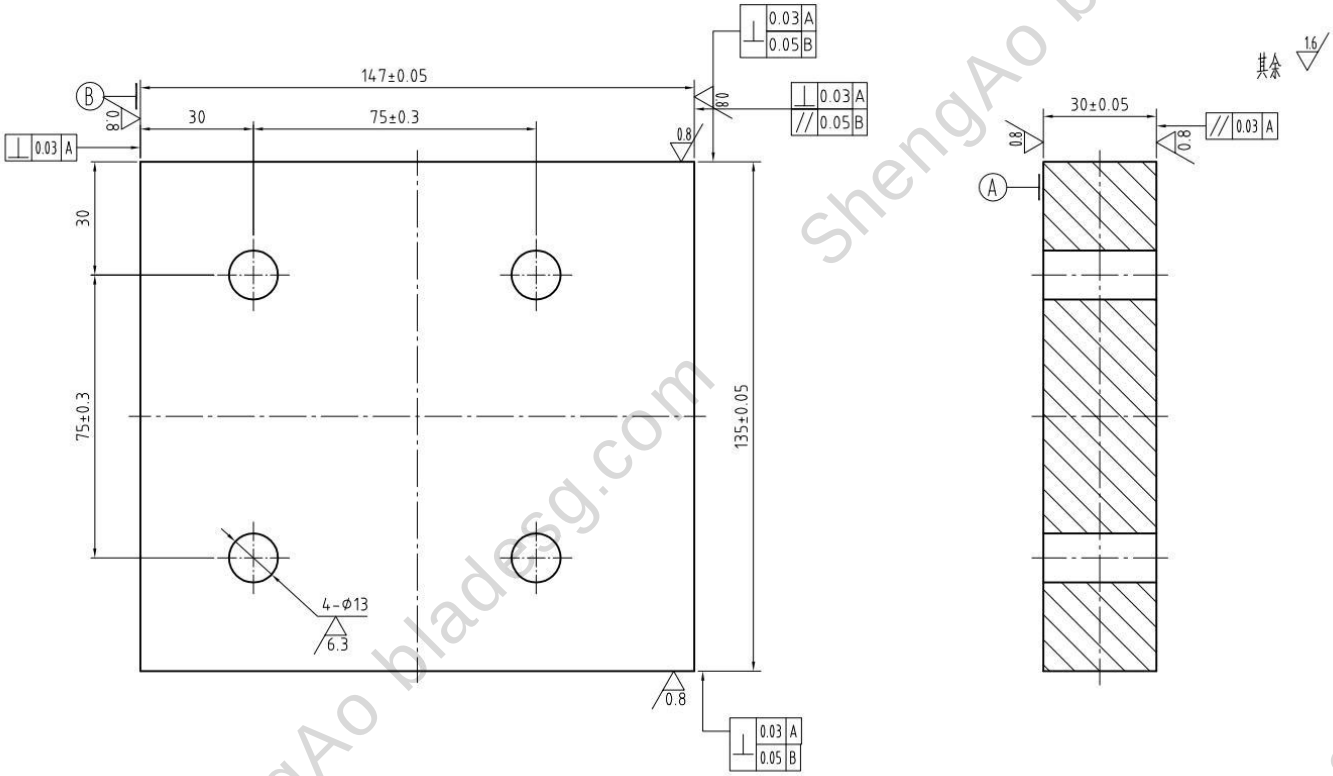

Flat Steel Bottom Blade

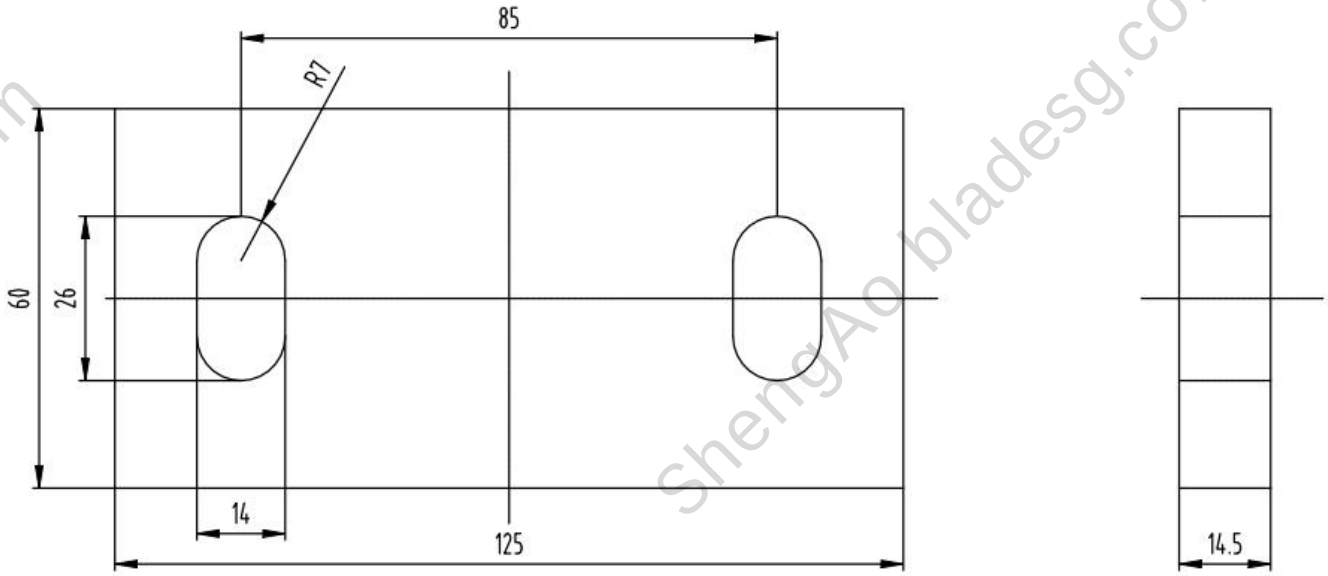

ShengAo bladesg.com